Artificial Evolution of Analog Circuit Designs

Jason D. Lohn

Computational Sciences Division
NASA Ames Research Center
Mountain View, CA 94035-1000

Introduction

Analog circuits are important since the world is fundamentally analog (the "eggshell")

Designs that are complex or have tight specs can be difficult and costly to design: can we automatically generate such circuit designs?

We limit our attention to high-level analog design using discrete components (R, L, C, Transistors) and ignore physical implementation issues.

Previous approaches: heuristics, knowledge-bases, simulated annealing, GAs, GP.

GP system of Koza first to approach "design" holistically (vs. parameter optimization)

Introduction

Circuit design domain is useful as a testbed for automated design algorithms:

- a practical, real-world design space
- allows comparison to human designs (including some designs that are "optimal" in that they have stood for tens of years without being superseded)
- both continuous and discrete constraints involved
- accurate public-domain simulators are readily available
- simulation times are reasonable (sub-second) for many design tasks

Exploring Representations

Our explorations focus on the representation of circuits

Desired requirements:

- minimal circuit design knowledge
- evolve component selection, component values and circuit topologies
- compact representation
- stay within legal circuit space (or have minimal "repair" operations)
- fast circuit-construction process

Early work on variants of "breadboard" representations

Current work on using simple automata to construct circuits using genetic algorithms

Circuit Construction

A *cc-bot* is a circuit constructing automata that

- begins building a circuit starting at the input node of a template circuit
- builds a circuit by sequentially placing components and conditionally modifying its position on the circuit
- is programmed using the following instruction set:

Instruction	Outgoing Node	Active Node
x-move-to-new	newly-created node	$\rightarrow$ newly-created node
x-cast-to-previous	previous node	unchanged
x-cast-to-ground	ground node	unchanged
x-cast-to-input	input node	unchanged
x-cast-to-output	output node	unchanged

Circuit Construction

Template circuit:

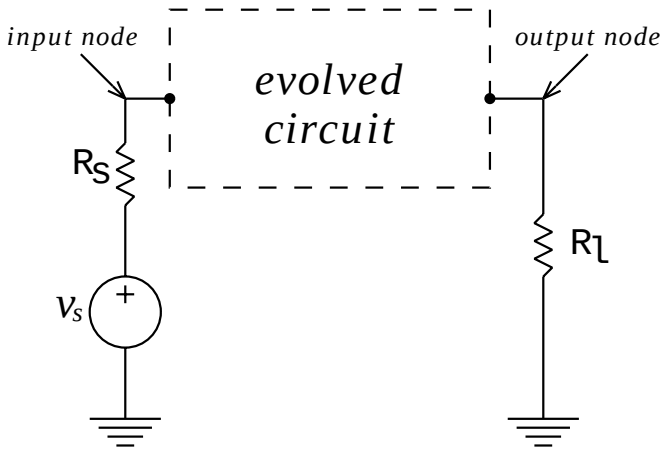

Set of selectable components:

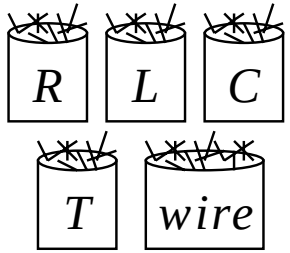

parts bins

Circuit Construction

Effect of placing a resistor with move-to-new instruction:

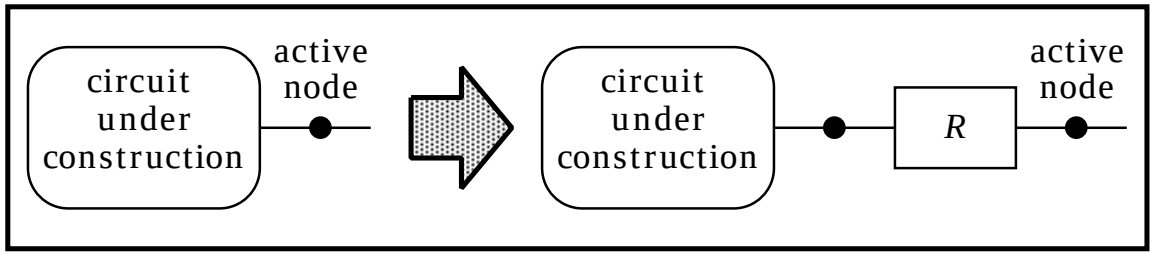

result of **move-to-new** instruction

Effect of placing a resistor cast-to-ground instruction:

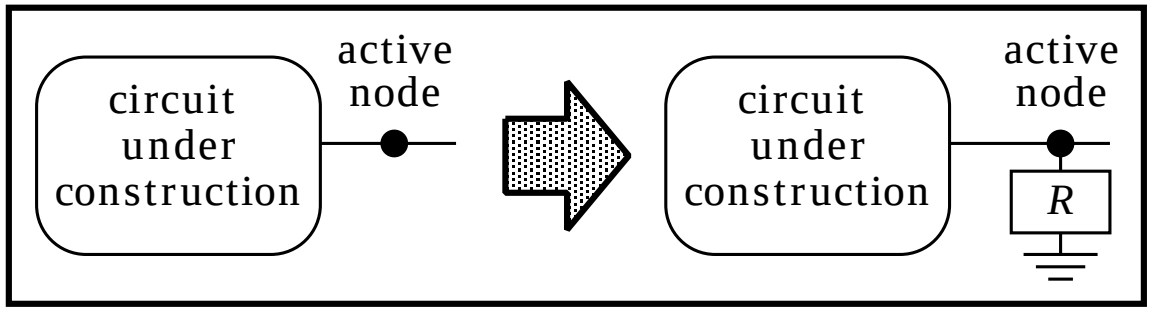

result of **cast-to-ground** instruction

Incorporating Transistors

Transistors are of great importance in analog (current gain) and digital (switch) integrated circuits

Bipolar junction transistor symbols: npn and pnp

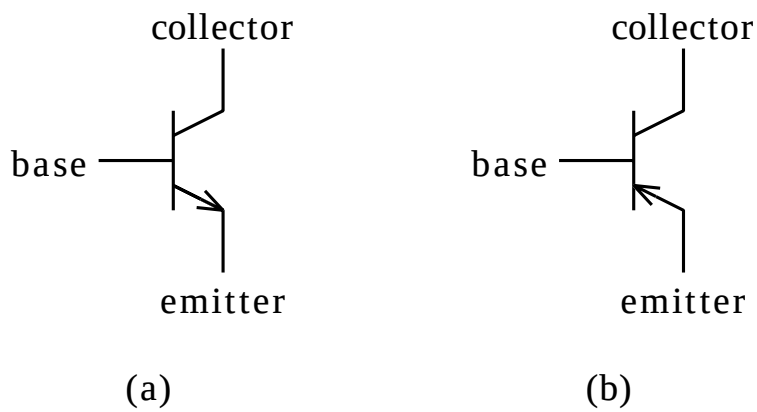

But because they have three terminals, they would introduce branching into the cc-bot technique and would necessitate more "repair" operations (which might not be a drawback)

Incorporating Transistors

Our present treatment of transistors:

> we hardware the third terminal to one of the following pre-existing circuit nodes: ground, power supply (positive or negative), input, output, the previously placed node, or even to itself

Put another way: devices with three terminals are treated as two terminal devices by having a fixed connection at the third terminal

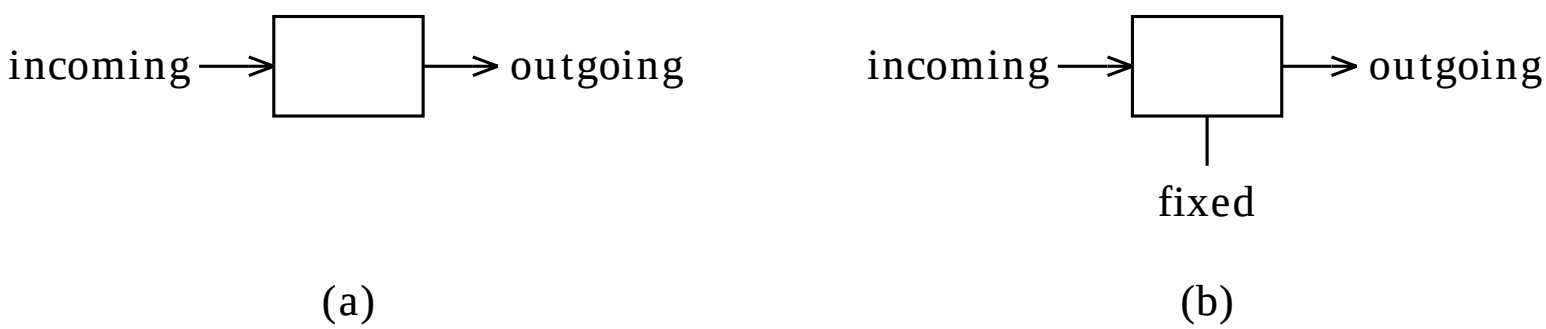

Transistor Configurations

Table of 52 configurations when the incoming terminal is the transistor's base terminal

	Outgoing and Fixed Terminals Connections											
Instruction Type	emitter to GND	collector to GND	emitter to PS	collector to PS	emitter to INPUT	collector to INPUT	emitter to OUTPUT	collector to OUTPUT	emitter to PREV	collector to PREV	emitter to base	collector to base
MOVE-TO-NEW	new	new	new	new	new INPUT	INPUT new	new OUTPUT	OUTPUT new	new PREV	PREV new	new	new
CAST-TO-PREVIOUS	previous	previous	previous	previous	previous INPUT	INPUT previous	previous OUTPUT	OUTPUT previous	N.A.	N.A.	previous	previous
CAST-TO-INPUT	input	input	input	input	N.A.	N.A.	input OUTPUT	OUTPUT input	input PREV	PREV input	input	input
CAST-TO-OUTPUT	output	output	output	output	output INPUT	INPUT output	N.A.	N.A.	output PREV	PREV output	output	output
CAST-TO-GND	N.A.	N.A.	gnd	gnd	gnd INPUT	INPUT gnd	gnd OUTPUT	OUTPUT gnd	gnd PREV	PREV gnd	gnd	gnd

Properties of cc-bot Technique

Advantages of cc-bot approach:

- no production of non-circuit graphs (danglers, islands, etc.), thus no repair operations needed
- small, simple circuit-constructing language: fast circuit construction

Disadvantages of cc-bot approach:

- restricted circuit topologies, reduces design space (potentially favorable in some cases)

Circuit Evaluation

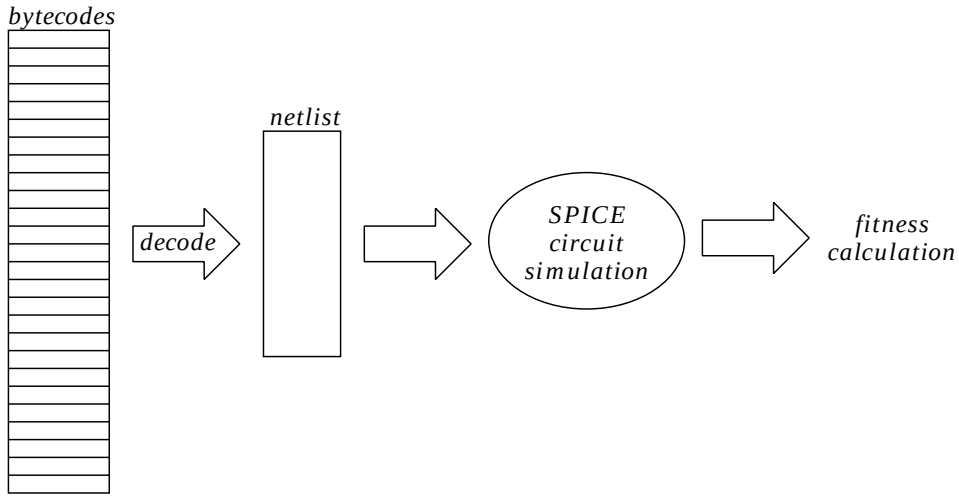

Master/slave parallel GA used since circuit simulations are compute intensive

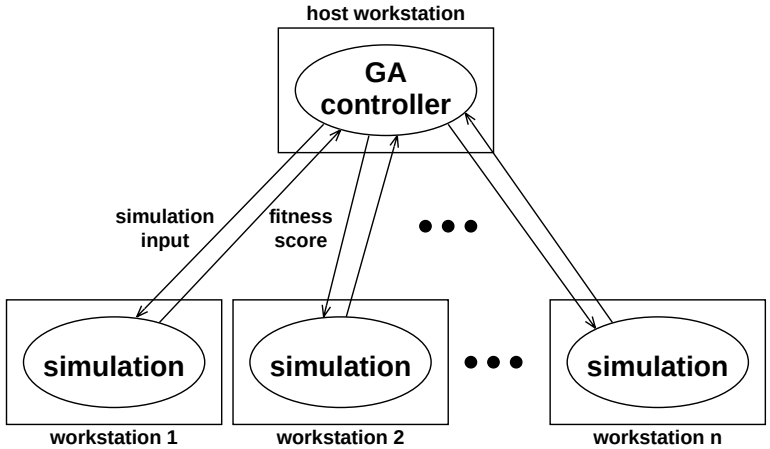

Linear Representation

An individual is a list of cc-bot instructions:

- circuit-constructing instruction
- component value (not needed for transistors)

Component values:

- Resistors: scaled sigmoidally to bias towards values below 10K, yet still allow large (100K ohm) values
- Capacitors and Inductors were scaled linearly between 10 pF and 200 μF, and 0.1 mH and 1.5 H, respectively

Circuit Design Problems

- low-pass filters (easy, medium, difficult)
- amplifiers (75 dB, 85 dB)

Low-pass Filter Design Problems

a circuit with desirable input/output specs:

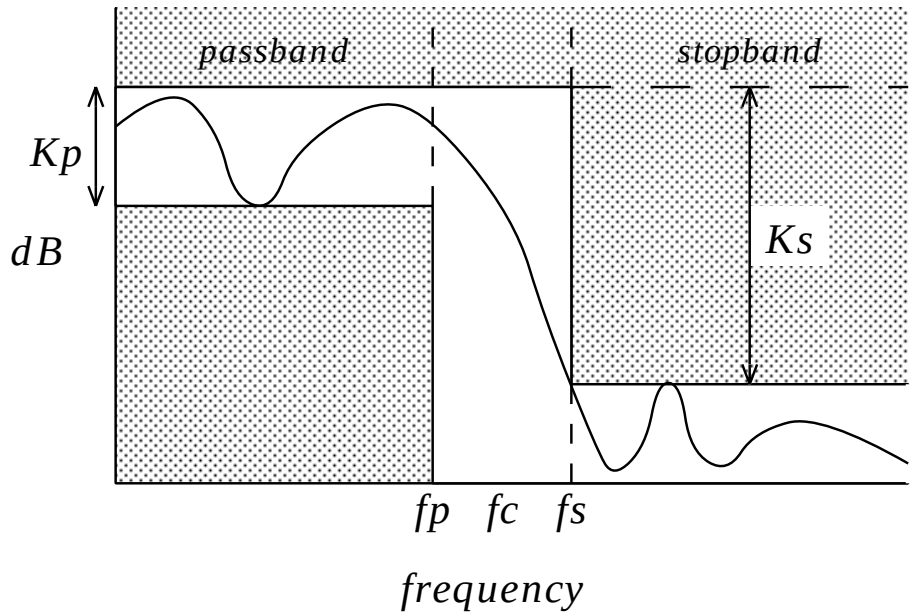

GA parameters: max ckt size = 100 components, pop size = 12K-18K, max gens = 500, xover = 0.8 mut = 0.2

Fitness Function

Fitness calculation:

- computed over 50-100 points (log-scaled frequency)
- absolute value of the difference of the individual's output and the target output
- error values were summed across evaluation points

Evolved Stethoscope Circuit

Evolved low-pass filter for use in electronic stethoscope:

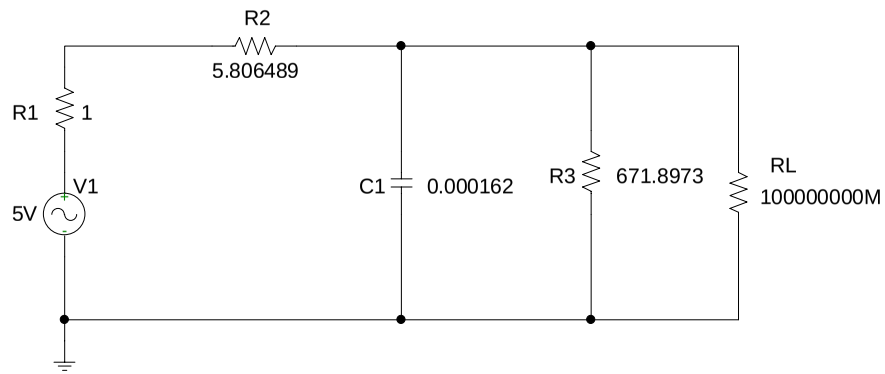

Frequency response:

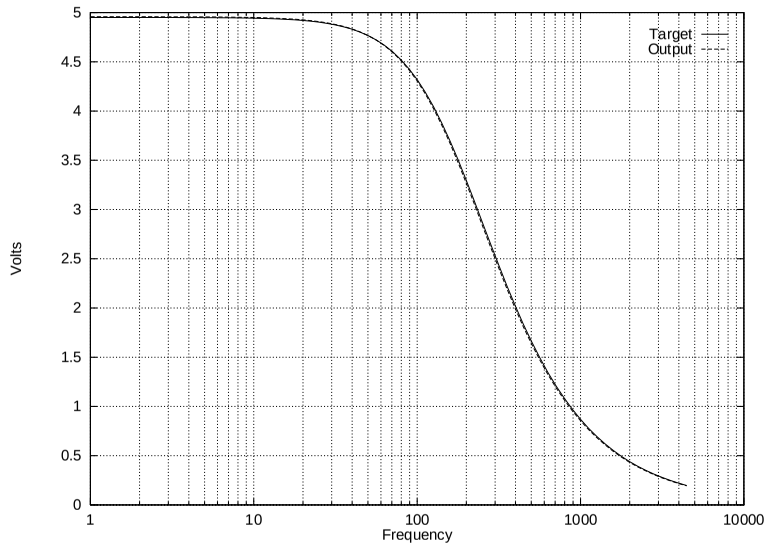

Evolved 3rd-Order Butterworth Lowpass Filter

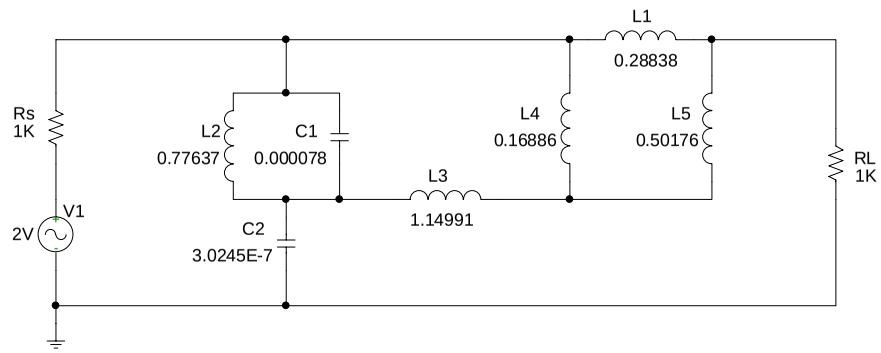

Frequency response:

$f_p = 925$ Hz $\quad K_p = 3.0$ dB

$f_s = 3200$ Hz $\quad K_s = 22.0$ dB

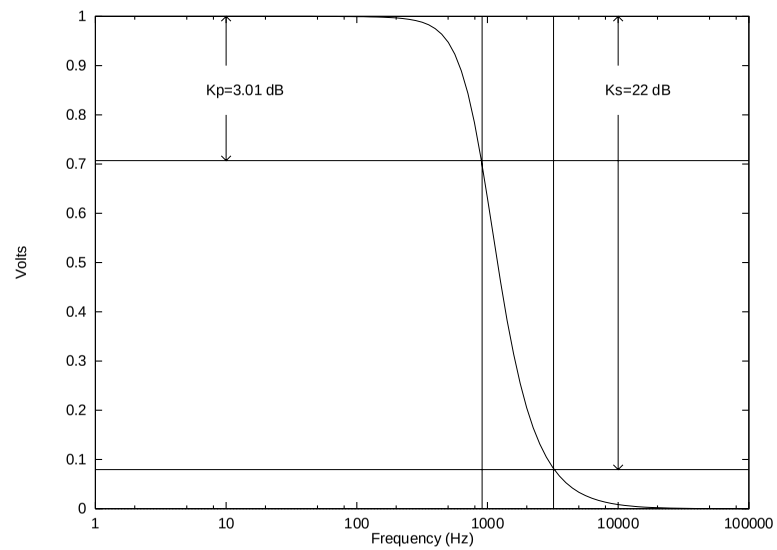

More Difficult Lowpass Filter

Experiment to evolve more difficult low-pass filter:

$f_p = 1000$ Hz and $f_s = 2000$ Hz

Comparison to two other studies:

	Components	K_p (dB)	K_s (dB)
Koza, et al 1996	LC	0.3	60.0
Zebulum, et al, 1998	RLC	1.6	24.8
Lohn, et al, 1998	RLC	0.01	63.5

More Difficult Lowpass Filter

Evolved circuit:

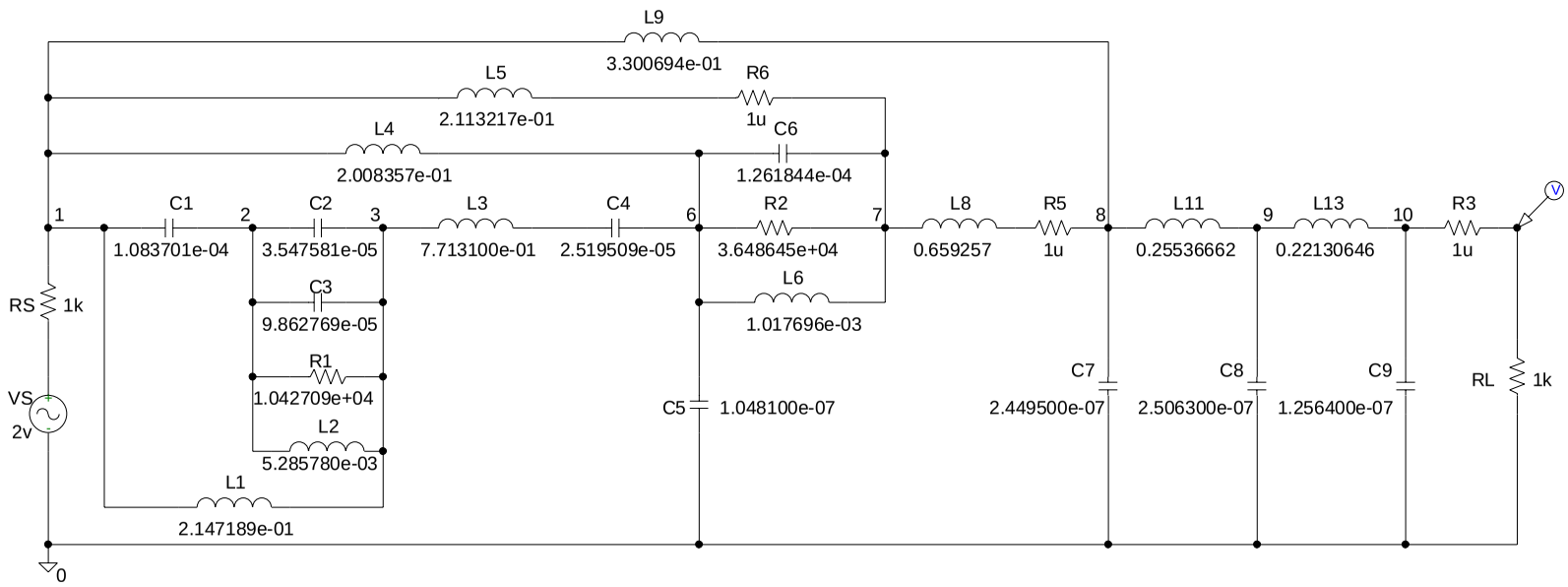

More Difficult Lowpass Filter

Frequency response:

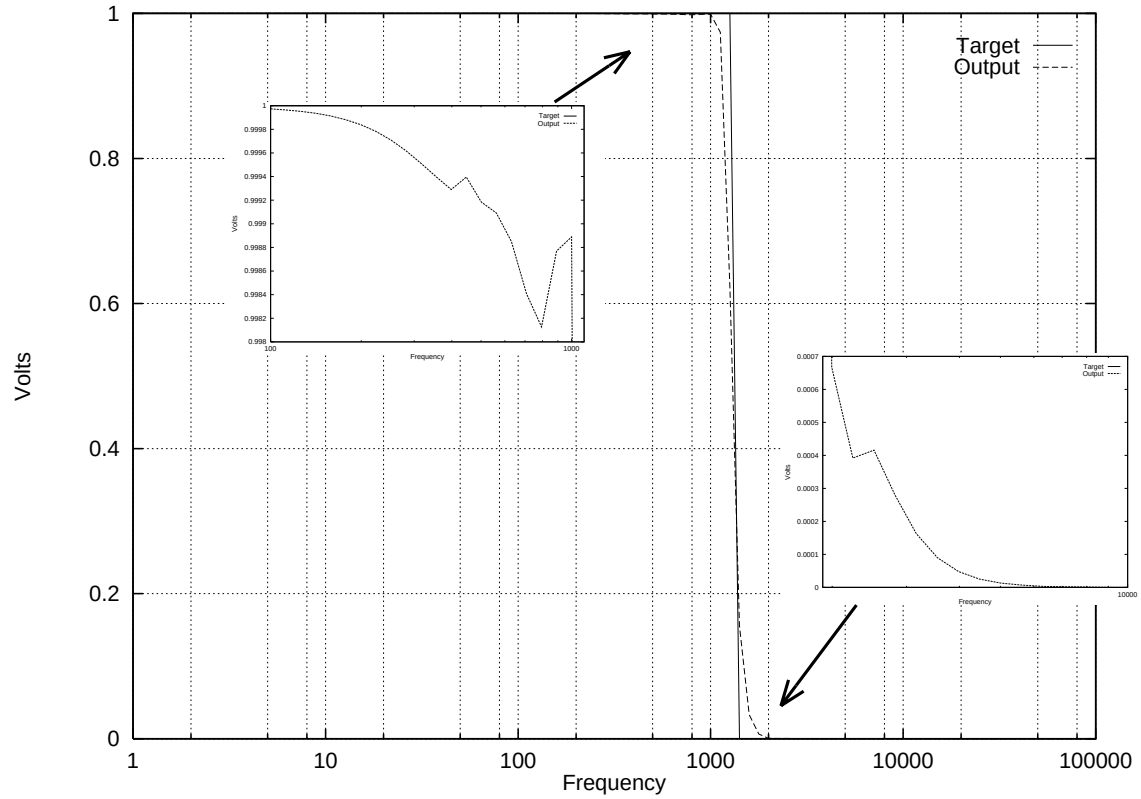

More Difficult Lowpass Filter

cc-bot program:

```
L_CAST_TO_PREV (255 49 35 15)
C_MOVE_TO_NEW (165 92 14 195) C  1  2 10837006
C_MOVE_TO_NEW (54 33 189 181) C  2  3 3547581
C_CAST_TO_PREV (150 126 113 51) C  3  2 9862769
L_CAST_TO_PREV (104 253 199 98) L  3  2 6880711
L_CAST_TO_INPUT (117 2 135 26) L  1  3 7668359
R_CAST_TO_PREV (165 121 81 68) R  3  2 10844497
L_CAST_TO_INPUT (103 172 194 68) L  1  3 6794434
L_CAST_TO_INPUT (166 141 122 8) L  1  3 10915194
L_CAST_TO_INPUT (158 21 3 216) L  1  3 10360067
L_CAST_TO_PREV (0 208 19 230) L  3  2 53267
L_MOVE_TO_NEW (117 177 76 195) L  3  4 7713100
C_MOVE_TO_NEW (54 113 172 195) C  4  5 3568044
C_MOVE_TO_NEW (130 210 156 62) C  5  6 8573596
C_CAST_TO_GND (0 40 241 68) C  0  6 10481
L_CAST_TO_INPUT (166 72 74 188) L  1  6 10897482
L_CAST_TO_INPUT (37 145 161 250) L  1  6 2462113
R_MOVE_TO_NEW (194 169 251 216) R  6  7 12757499
L_CAST_TO_PREV (0 40 19 91) L  7  6 10259
C_CAST_TO_PREV (155 12 129 188) C  7  6 10161281
L_CAST_TO_INPUT (37 107 50 181) L  1  7 2452274
C_CAST_TO_PREV (37 126 70 188) C  7  6 2457158
L_CAST_TO_INPUT (233 55 172 96) L  1  7 15284140
L_CAST_TO_PREV (19 107 108 20) L  7  6 1272684
L_MOVE_TO_NEW (172 171 198 62) L  7  8 11316166
C_CAST_TO_GND (0 95 175 51) C  0  8 24495
L_CAST_TO_PREV (240 253 199 83) L  8  7 15793607
L_CAST_TO_INPUT (50 93 86 110) L  1  8 3300694
L_MOVE_TO_NEW (82 11 90 62) L  8  9 5376858
C_CAST_TO_GND (0 97 231 96) C  0  9 25063
L_CAST_TO_PREV (74 54 50 20) L  9  8 4863538
L_MOVE_TO_NEW (66 151 190 77) L  9 10 4364222
C_CAST_TO_GND (0 49 20 126) C  0 10 12564
L_CAST_TO_PREV (68 130 90 91) L 10  9 4489818
```

More Difficult Lowpass Filter

SPICE Netlist

```
Evolved Lowpass (RLC555)
*** The following circuit was GA-generated
*** Begin netlist
VSOURCE1 256  0  DC 0V  AC 2V
RSOURCE1 256  1  1000
RLOAD001 255  0  1000
CAPC0001    1    2     1.083701e-04
CAPC0002    2    3     3.547581e-05
CAPC0003    3    2     9.862769e-05
RSTR0001    3    2     1.042709e+04
LIND0001    1    3     2.147189e-01
LIND0002    3    2     5.285780e-03
LIND0003    3    4     7.713100e-01
CAPC0004    4    6     2.519509e-05
CAPC0005    0    6     1.048100e-07
LIND0004    1    6     2.008357e-01
RSTR0002    6    7     3.648645e+04
CAPC0006    7    6     1.261844e-04
LIND0005    1    7     2.113217e-01
LIND0006    7    6     1.017696e-03
LIND0007    7    8     1.131617e+00
CAPC0007    0    8     2.449500e-07
LIND0008    8    7     1.579361e+00
LIND0009    1    8     3.300694e-01
LIND0010    8    9     5.376858e-01
CAPC0008    0    9     2.506300e-07
LIND0011    9    8     4.863538e-01
LIND0012    9   10     4.364222e-01
CAPC0009    0   10     1.256400e-07
LIND0013   10    9     4.489818e-01
RSTR0003   10  255     1.000000e-06
*** End netlist
*** Total of   25 components
.AC DEC 20 1 100K
*** Output Stmts: What to print out
*** .PRINT .PLOT
.PRINT AC VM(255)
.OPTIONS NOBREAK NOPAGE NOMOD
.END
```

75 dB Amplifier

Circuit schematic of evolved 75 dB amplifier

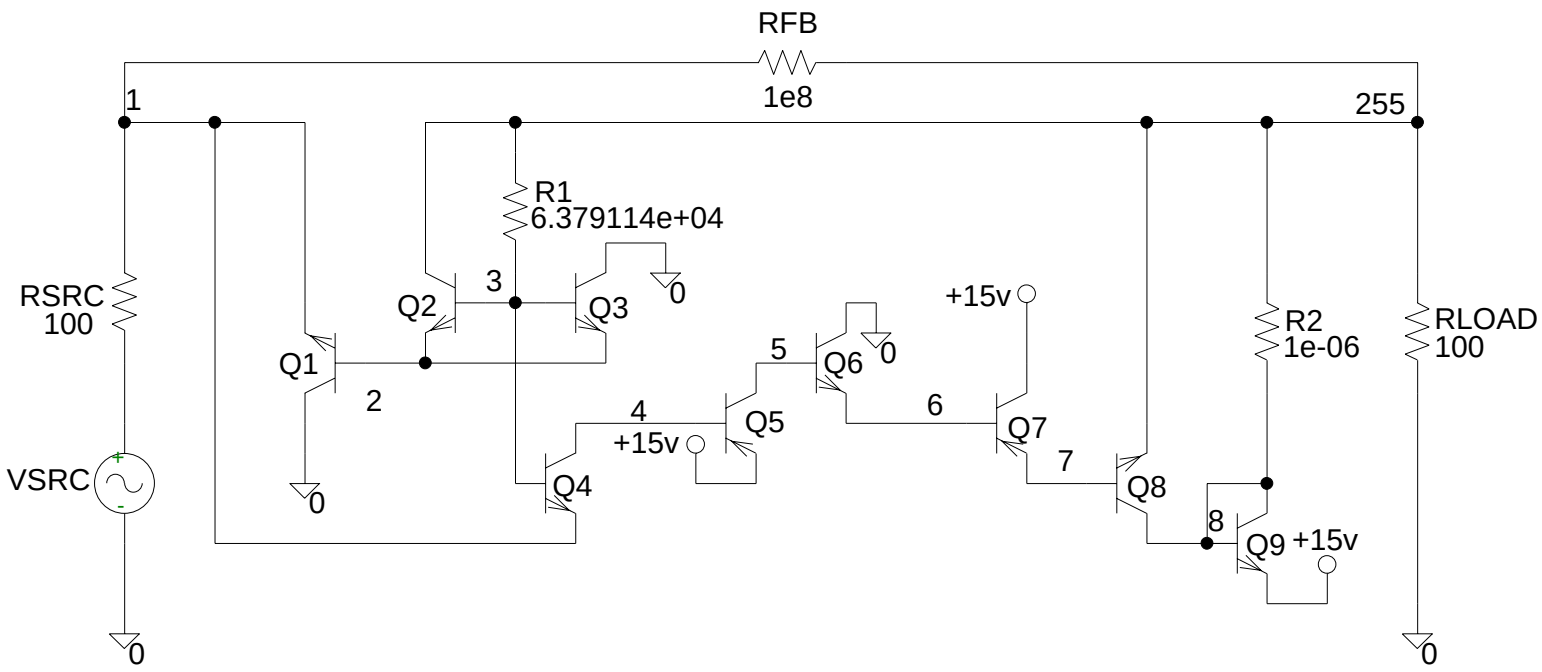

75 dB Amplifier

Small signal behavior of 75 dB evolved amplifier:

- time domain input waveform is 1 kHz (bottom) which is inverted and amplified (top)
- frequency response showing 3 dB bandwidth of 7.59 kHz.

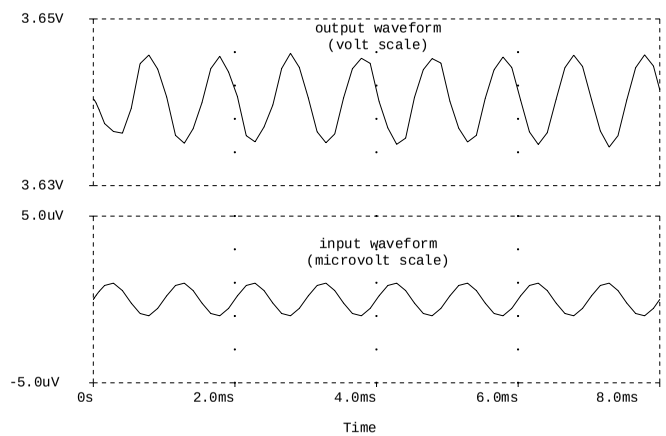

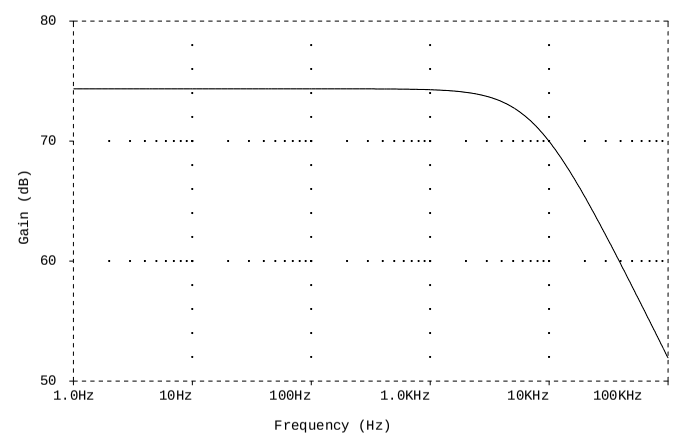

75 dB Amplifier

DC transfer characteristic of 75 dB amplifier

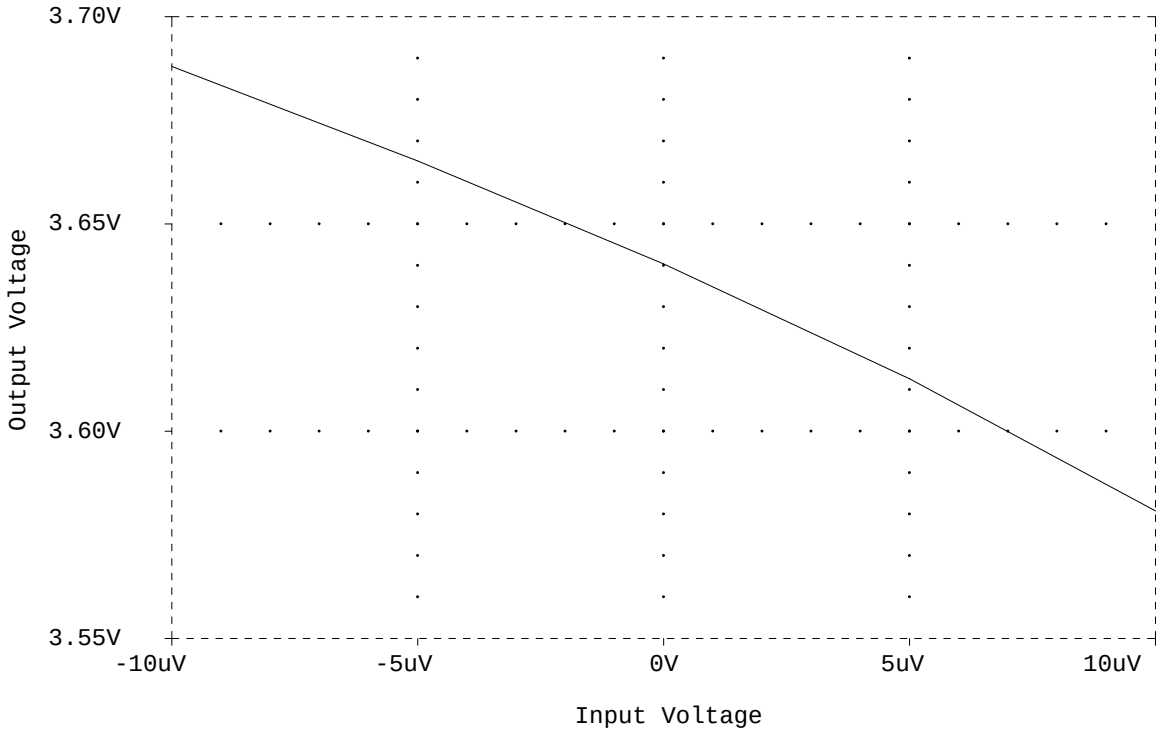

85 dB Amplifier

Circuit schematic of evolved 85 dB amplifier

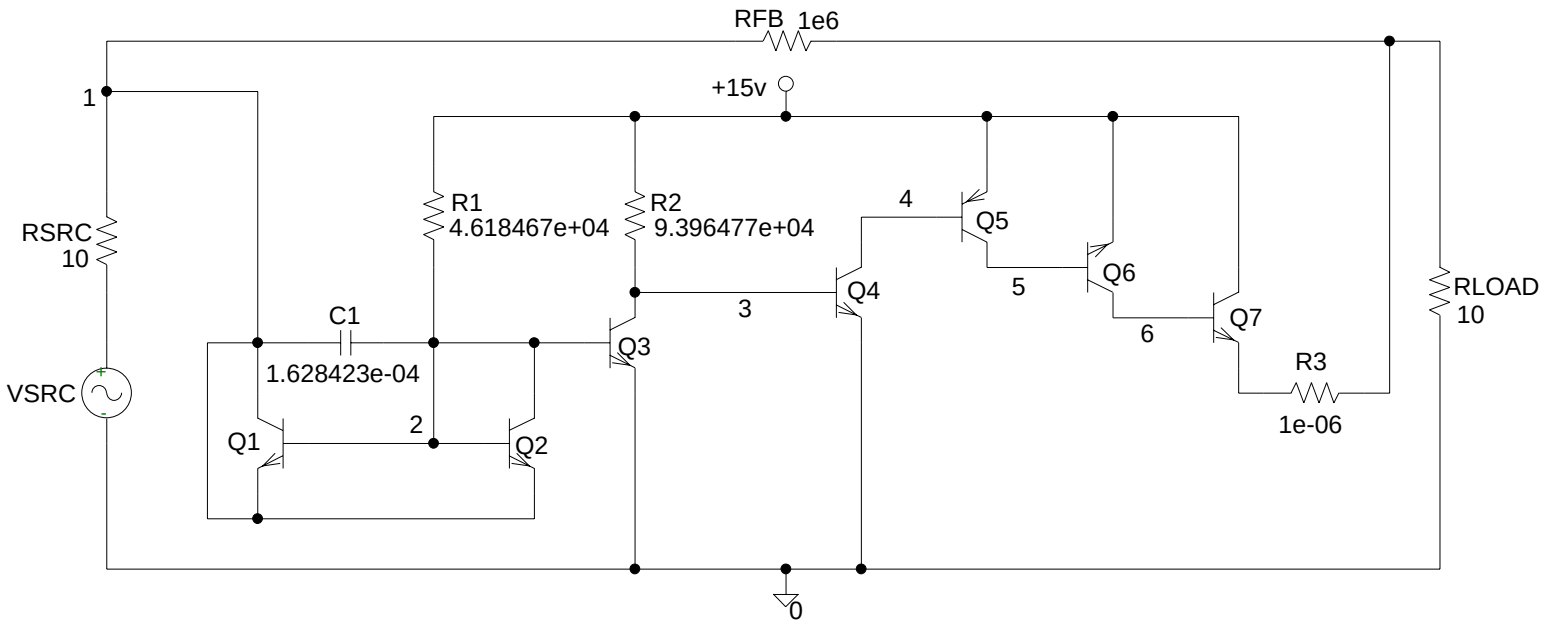

85 dB Amplifier

Small signal behavior of 85 dB evolved amplifier:

- time domain input waveform is 1 kHz (bottom) which is inverted and amplified (top)
- frequency response showing flatband gain of 85.46 dB

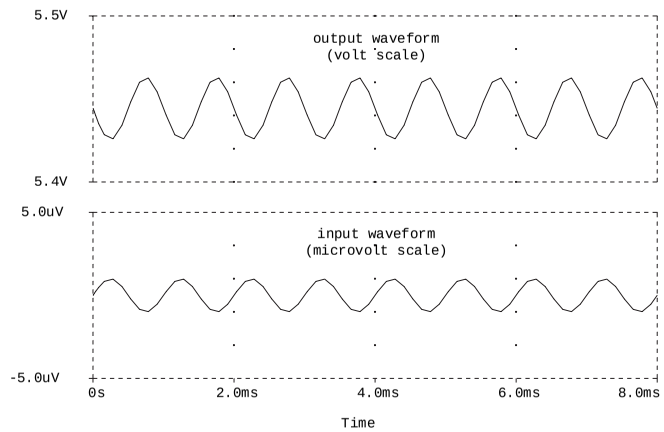

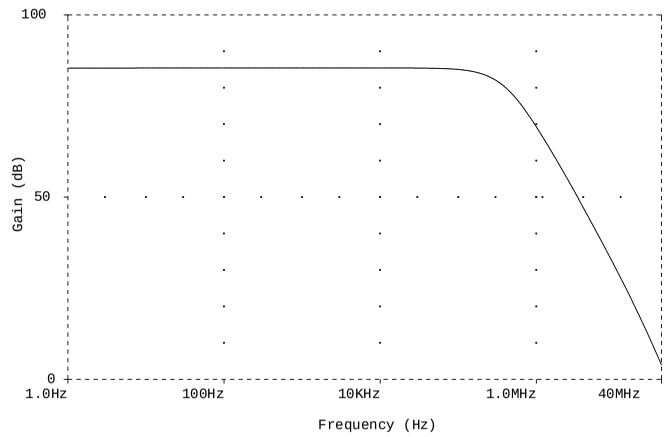

85 dB Amplifier

DC transfer characteristic of 85 dB amplifier

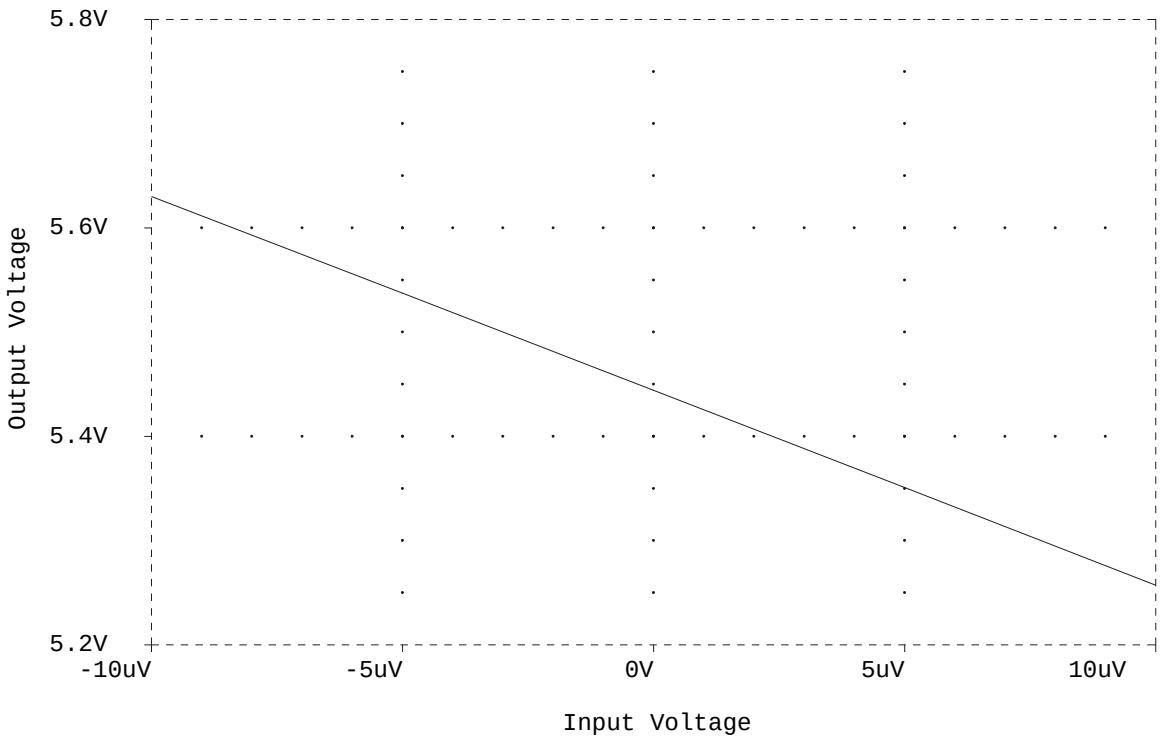

Conclusion

- a GA using a simple linear circuit representation is capable of evolving circuits of low to medium difficulty
  - representation stays within legal circuit design space (at cost of some topologies)
  - fast circuit-construction
- detailed simulations of the evolved designs suggest that all are electrically well-behaved and thus suitable to physical implementation
- introduced a circuit construction method that uses a very simple set of primitives encoded in a linear fashion
- our latest results using co-evolutionary search are promising